C-MSDXXXXX

E	C6900N	MODIFIED PRINTING INFORMATION	2023.03.13	.
F	C10172	CORRECTING DRAWING ERRORS	2026.04.13	.

REV	ECN	DESCRIPTION	DATE	MODIFIED
A		RELEASE	2018.05.20	.
B	C4382N	CHANGE LABEL	2020.10.15	.
C	C5286N	MODIFIED INTERFACE DIMENSIONS	2021.03.27	.
D	C6283N	UPDATE ACTION LABELS	2022.07.26	.

Amphenol PCD SZ
ORIGINAL
PDF Format
R&D

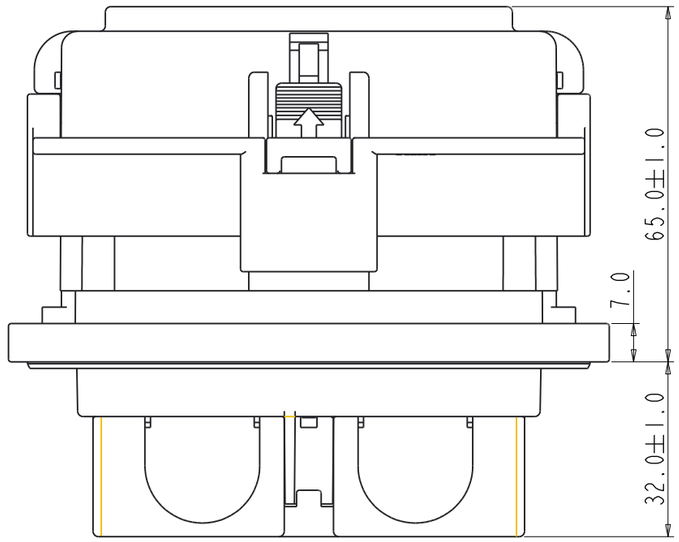

MSD FRONT MOUNTING

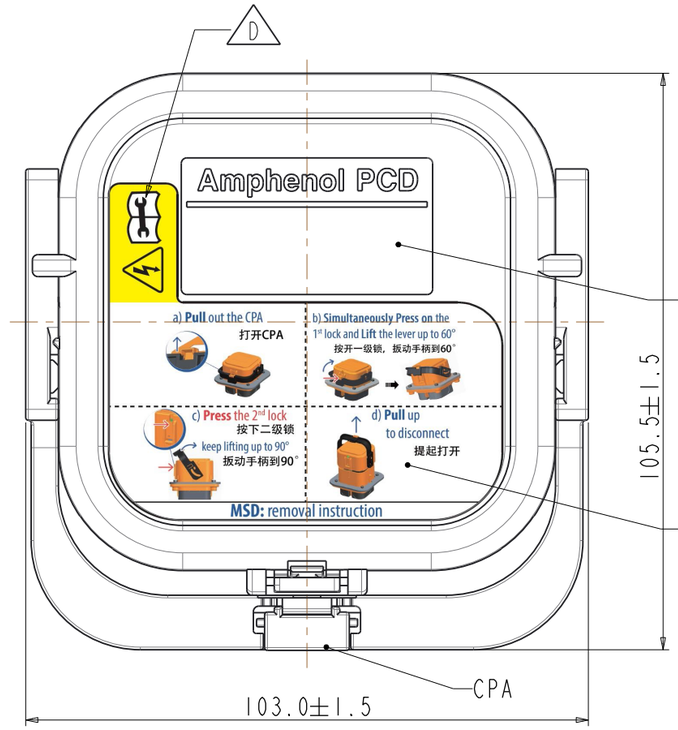

E
LASER PRINTING AREA
FOR DETAILS, SEE 1,2,3.4
激光印字内容，详见 1,2,3,4

WARNING LABEL
警示操作标签

●备注 印字的电流根据所选熔断器而定
NOTE: PRINT CURRENT
BASE ON THE FUSE

1. WITHOUT FUSE不带熔断器

TYPE: MSD-SHUNT(UNFUSED)
RATED VOLTAGE AND CURRENT:
DC 750V 200A
T/N: XXXXXXXX

E

●第三页类别1印字内容Category 1 Print Content

2. WITHOUT FUSE不带熔断器

TYPE: MSD-SHUNT(UNFUSED)
RATED VOLTAGE AND CURRENT:
DC 1000V 260A
T/N: XXXXXXXX

E

●第三页类别2印字内容Category 2 Print Content

3. WITH OLD FUSE带老款熔断器

TYPE: MSD-XXXA(FUSED)
RATED VOLTAGE AND CURRENT:
AC 690V XXXA
T/N: XXXXXXXX

E

●第三页类别3,4印字内容Categ.3,4 Print Content

4. WITH FUSE带熔断器

MSDVMXXX(FUSED)
RATED VOLTAGE AND CURRENT:
DC 800V XXXA
T/N: XXXXXXXX

E

●第三页类别5印字内容Category 5 Print Content

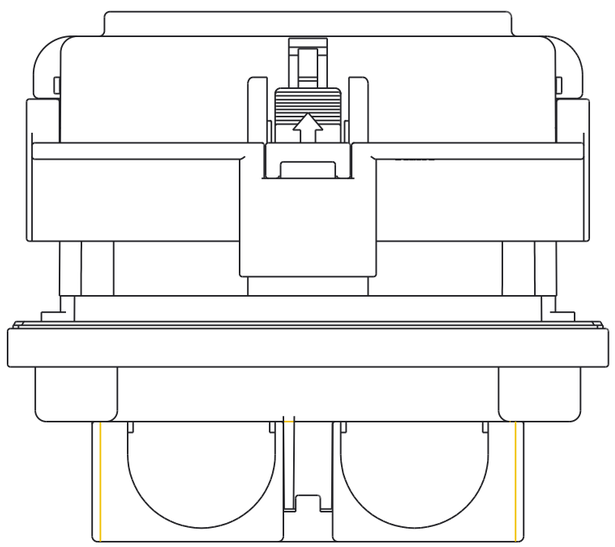

MSD REAR MOUNTING

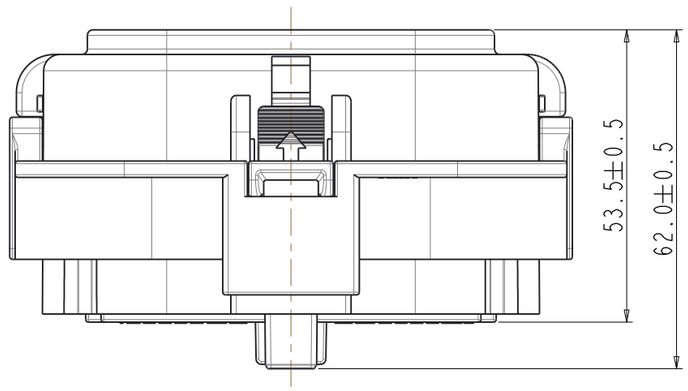

MSD PLUG

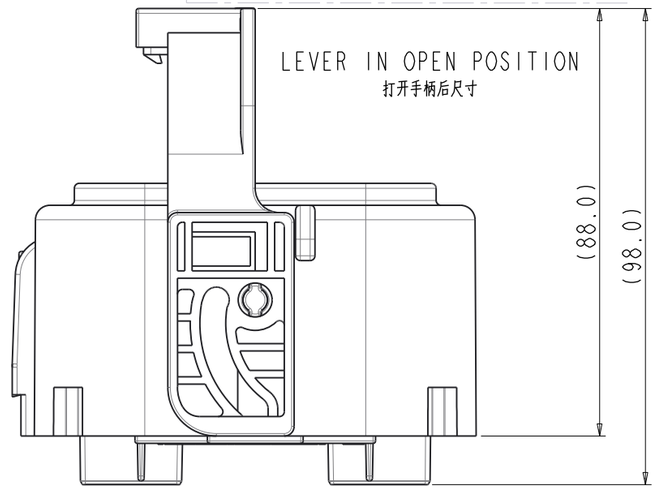

C-MSDXXXXX

C-MSDXXXXX

DIMENSIONS	TOLERANCES	PROJECTION	Amphenol PCD Shenzhen	TITLE
ANSI Y14.5M UNITS: MM Pro/E FILE	.X ±0.5 .XX ±0.05 ANGLES ±2°		ENGR —	MSD ASSEMBLY
ORIGINAL	THIS DOCUMENT CONTAINS PROPRIETARY INFORMATION WHICH IS THE CONFIDENTIAL PROPERTY OF Amphenol PCD Shenzhen Co. Ltd Amphenol PCD Shenzhen Co. Ltd RESERVES THE RIGHT TO CLARIFY THIS DRAWING		CHKD APPD	SIZE A3 / DWG NO. C-MSDXXXXX / REV F
				SCALE: 2:1 / SHEET 1 OF 3

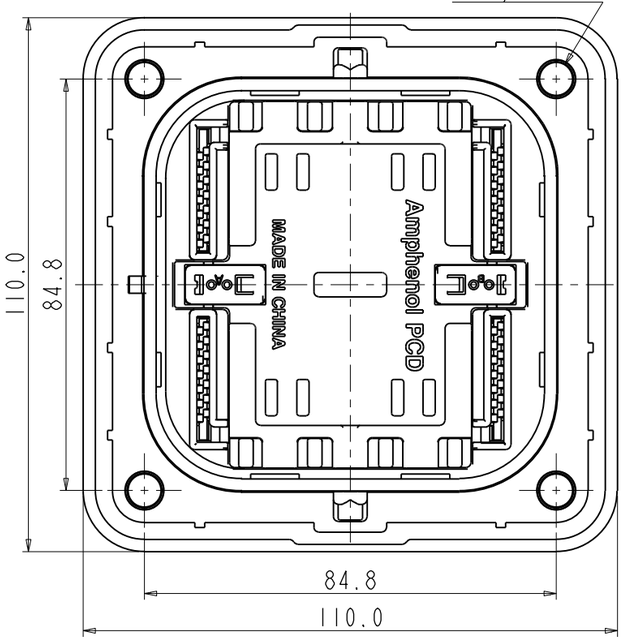

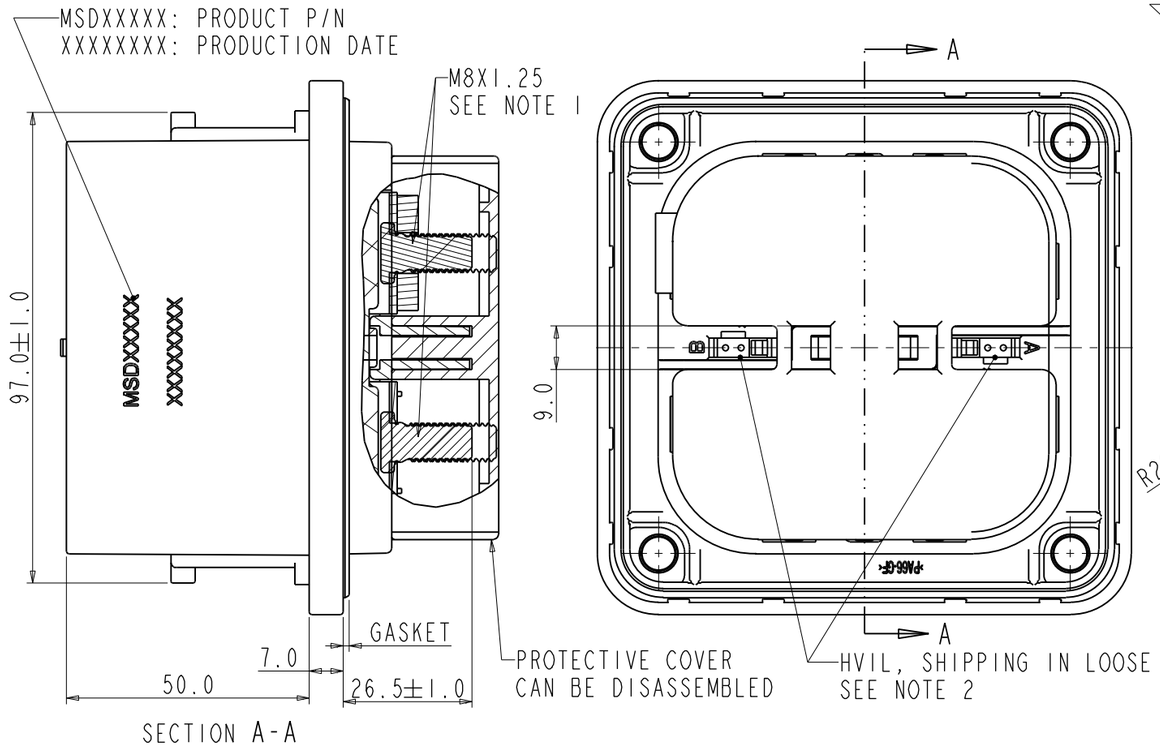

SECTION A-A

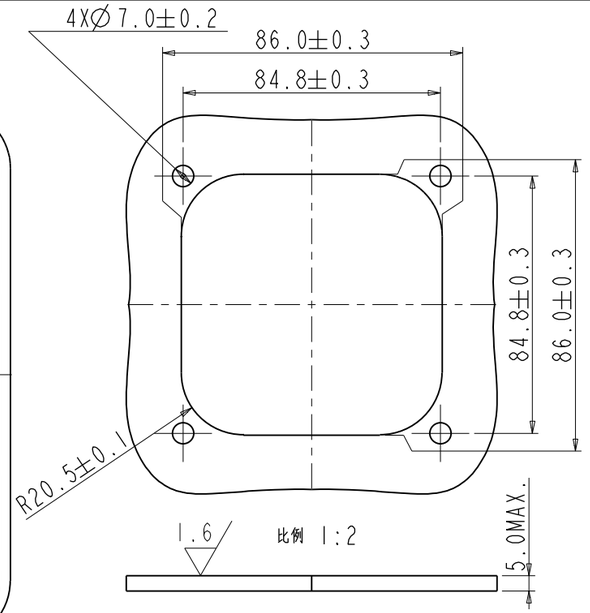

FRONT MOUNTING INTERFACE SPECIFICATION
前安装板面参考安装尺寸

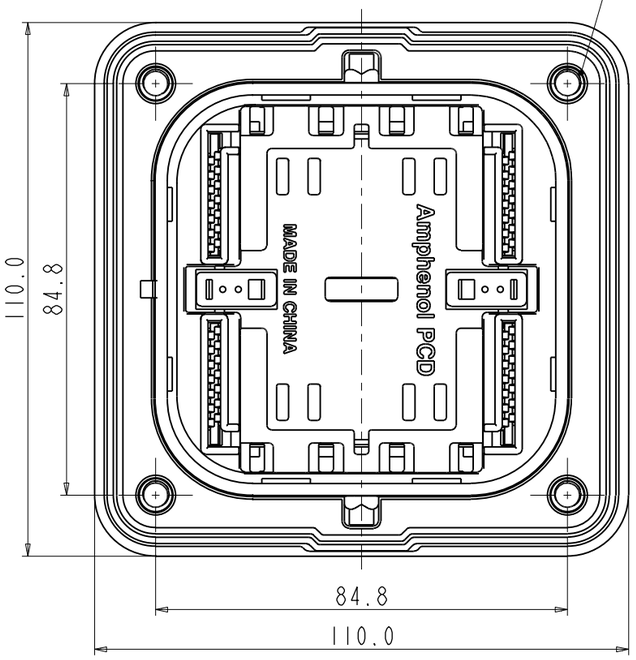

MSD RECEPTACLE

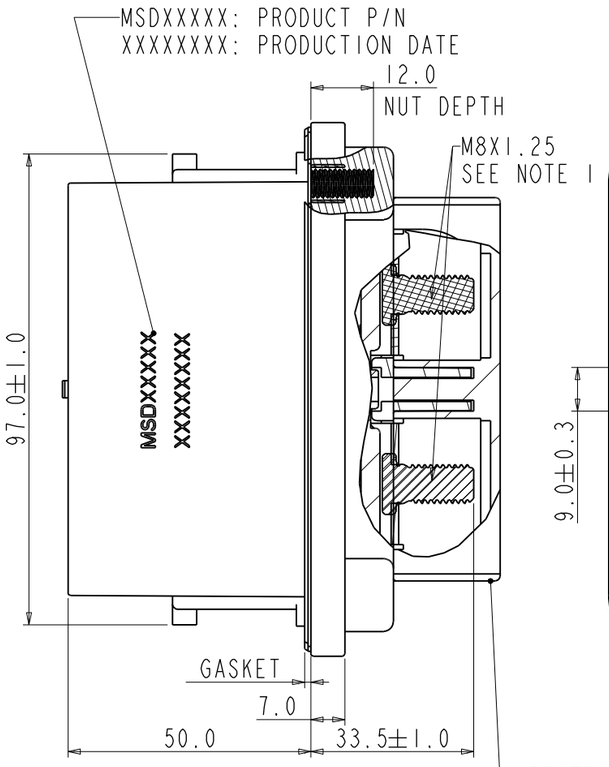

SECTION B-B

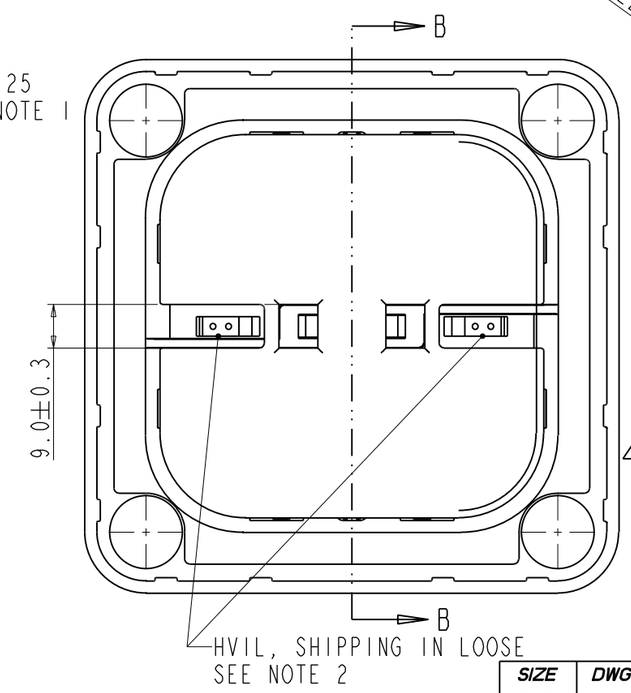

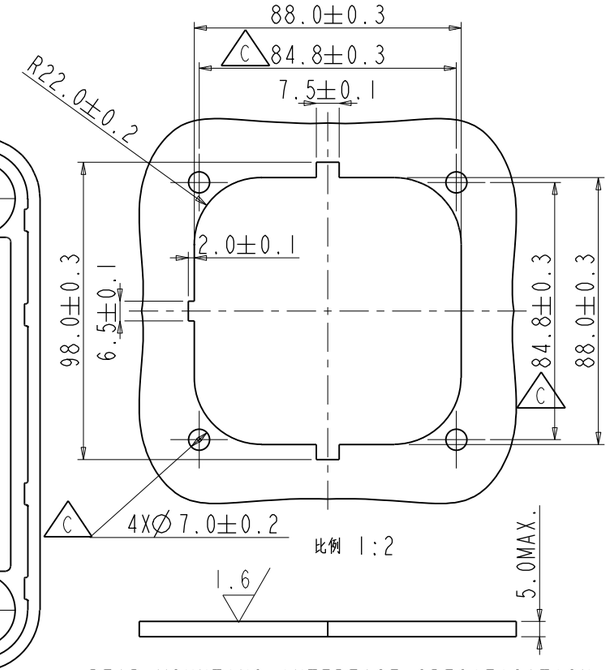

REAR MOUNTING INTERFACE SPECIFICATION
后安装板面参考安装尺寸

SIZE	DWG NO.	REV
A3	C-MSDXXXXX	F
	SCALE: 2:1	SHEET 2 OF 3

C-MSDXXXXX

C-MSDXXXXX

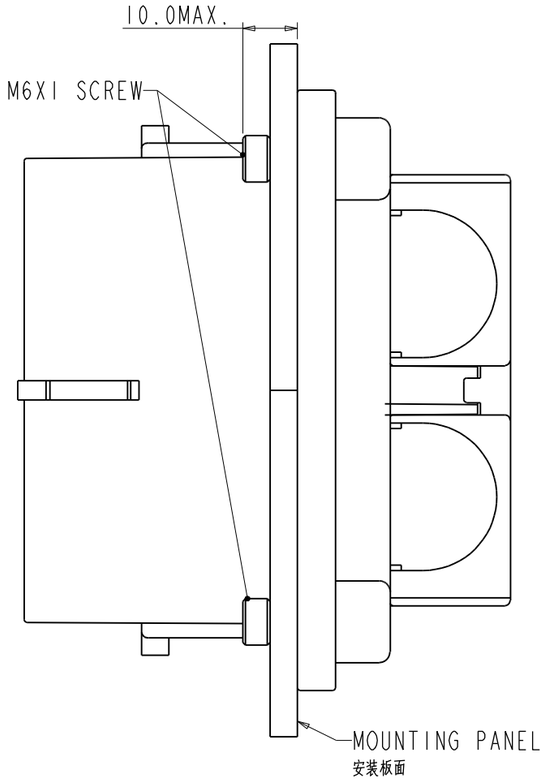

REAR MOUNTING SCREW SPECIFICATION
后安装 螺柱尺寸规格

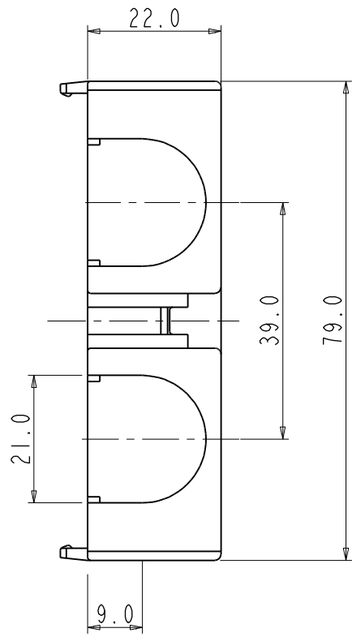

PROTECTIVE REAR COVER FOR BUSBAR
铜排保护盖

NOTES:
1. THREADED STUD TORQUE LIMITS接线端子锁紧力矩: M6: 6N.m, M8:13.4N.m.
2. HVIL CONNECTOR信号连接器型号: MSD-HVIL-2S(散装出货,另有说明除外)
3. MOUNTING SURFACE THICKNESS: MAX 5mm 法兰安装板厚度 最大5mm
4. SHELL MATERIAL: PA66+GF, UL94V0.
5. INNER HOUSING MAY BE ASSEMBLED ROTATED 180° FROM AS SHOW
内部插芯有可能与图纸中的方向相差180°
6. MAX. TERMINAL WITH WIRE 95MM^2 IF ADDED PROTECTIVE REAR COVER.
MAX. TERMINAL WITH WIRE 120MM^2 IF WITHOUT PROTECTIVE REAR COVER.
7. Humidity相对湿度40%~70% (AT 23±5°C)

TECHNICAL DATA		FEATURE
RATED VOLTAGE(NO FUSE)	1000V DC	✦
RATED VOLTAGE(WITH FUSE)	800V DC.MAX.	✦
OPERATING TEMPERATURE	-40°C~+125°C	
AMBIENT TEMPERATURE	-40°C~+70°C	
DIELECTRIC WITHSTANDING VOLTAGE	3000V AC	✦
INSULATION RESISTANCE	100MΩ.MIN.	✦
DURABILITY	50 CYCLES	◎
WATERPROOF(MATED CONDITION)	IP67, IP6K9K	✦

✦:Critical Feature ◎:Important Feature

1. PLUG PART NUMBER 插头型号:

CATEGORY 类别	FUSE MFG. 熔断器生产商	DESCRIPTION 描述	ORDER P/N 订单型号	FUSE SPEC. 熔断器规格	MARKING 对应插头印字	RATED VOLTAGE 额定电压	MATED TYPE 对配连接器型号	REMARK 备注
1	N/A	PLUG,SHUNT 插头,短接版	MSDM000	N/A	SHUNT 200A	750V DC	MSDF000F MSDF000R	
2	N/A	PLUG,SHUNT 插头,短接升级电流版	MSDVM000	N/A	SHUNT 260A	1000V DC	MSDVIF000F MSDVIF000R	
3	Ferraz 法雷	PLUG插头	MSDM2001	200A	200A	690V AC,600V DC	ALL	THE FUSE IS PROVIDED BY CUSTOMER 客供熔断器
			MSDM2501	250A	250A			
			MSDM3151	315A	315A			
			MSDM3501	350A	350A			
			MSDM4001	400A	400A			
			MSDM4501	450A	450A			
			MSDM5001	500A	500A			
			MSDM5501	550A	550A	690V AC,500V DC		
			MSDM6301	630A	630A	690V AC,500V DC		
4	BUSSMANN 巴斯曼	PLUG插头	MSDM2002	200A	200A	690V AC,600V DC	ALL	
			MSDM2502	250A	250A			
			MSDM3152	315A	315A			
			MSDM3502	350A	350A			
			MSDM4002	400A	400A			
			MSDM4502	450A	450A			
			MSDM5002	500A	500A			
			MSDM5502	550A	550A	690V AC,500V DC		
			MSDM6302	630A	630A	690V AC,500V DC		
5	BUSSMANN 巴斯曼	PLUG, VOLTAGE UPGRADE 插头,电压升级版	MSDVM200	200A	200A	800V DC	ALL	
			MSDVM250	250A	250A			
			MSDVM315	315A	315A			
			MSDVM350	350A	350A			
			MSDVM400	400A	400A			
			MSDVM450	450A	450A			
			MSDVM500	500A	500A			
			MSDVM550	550A	550A			
			MSDVM630	630A	630A			

2. SOCKET PART NUMBER 插座型号:

ITEM 序列	DESCRIPTION 描述	ORDER P/N 订单型号	RATED CURRENT额定电流
1	SOCKET,FRONT MOUNTED前安装插座	MSDF000F	200A
2	SOCKET,REAR MOUNTED后安装插座	MSDF000R	200A
3	SOCKET,FRONT MOUNTED前安装插座升级电流版	MSDVIF000F	260A
4	SOCKET,REAR MOUNTED后安装插座升级电流版	MSDVIF000R	260A

SIZE	DWG NO.	REV
A3	C-MSDXXXXX	F
	SCALE: 2:1	SHEET 3 OF 3

C-MSDXXXXX

C-MSDXXXXX