安费诺精密连接器(深圳)有限公司
Amphenol PCD Shenzhen
受 控 文 件
2021年5月20日

Amphenol PCD SZ
ORIGINAL
PDF Format
R&D

C-HVSL282042XX

REV	ECN	DESCRIPTION	DATE	MODIFIED
A		FIRST RELEASE	2018.06.13	
B	C3187	ADD SIGNAL CABLE OD	2019.03.13	
C	R0380N	ADJUST RATING VOLTAGE	2019.03.23	
D	C3275-N	Correction of drawing errors	2019.4.24	
E	C4966N	ENLARGE THE SEALING GROOVE	2020.12.21	

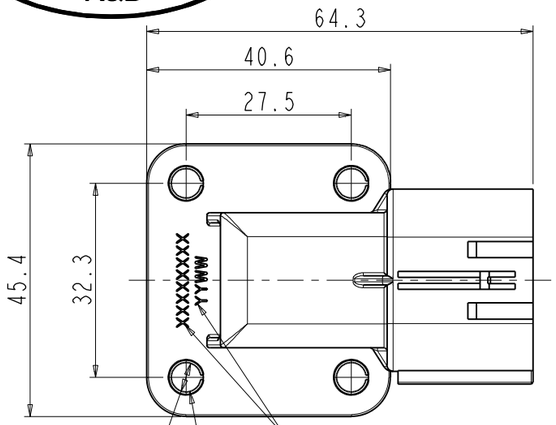

4XM4 SCREW AND WASHER APPLICABLE

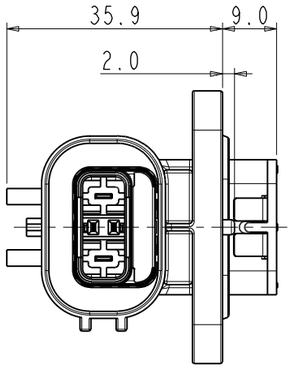

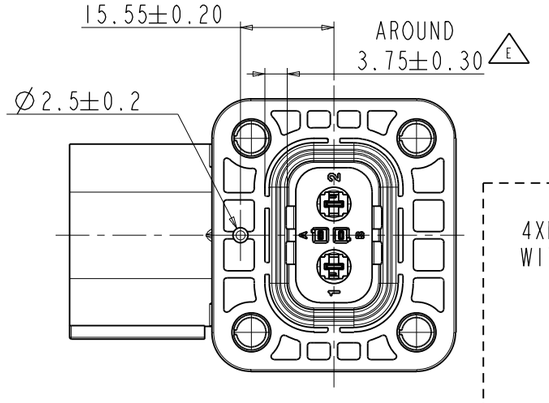

NOTE:
1. RECEPTACLE DON'T INCLUDE CONTACT PIN, NEED TO BUY SEPARATE:
   THE MAIN CONTACT:C3100036I2S, USE LEVEL: 2PCS
   THE HVIL CONTACT:C3100036I4S, USE LEVEL: 2PCS
2. PREVAILING TORQUES:2N*M

✦ :CRITICAL CHARACTERISTICS 关键特性
◎ :IMPORTANT CHARACTERISTICS 重要特性

HVSL 282 04 2 X X

A: KEY A
B: KEY B
C: KEY C
D: KEY D
E: KEY E
F: KEY F

0: WITHOUT HVIL
1: WITH HVIL

TECHNICAL DATA		
CURRENT RATE (4MM^2 UNSHIELD CABLE)	32A @ AMBIENT 70°C	✦
CURRENT RATE (2.5~3MM^2 UNSHIELD CABLE)	23A @ AMBIENT 70°C	✦
RATING VOLTAGE (OVERVOLTAGE CATEGORY II POLLUTION DEGREE 2)	1000V DC	✦
OPERATING TEMPERATURE	-40~125°C	
DIELECTRIC WITHSTAND VOLTAGE	POWER CONTACT 3000V AC(RMS)	✦
	SIGNAL CONTACT 660V AC (RMS)	
INSULATION RESISTANCE	200MΩ MIN. 25°C, NO CABLE	✦
DURABILITY	50 CYCLES	◎
SHIELDING	YES	
WATERPRROF(MATED CONDITION)	IP 67, IP6K9K	✦
PROTECTION LEVEL	IP2XB	✦
AMBIENT TEMPERATURE	-40~70°C	
RoHS	YES	✦

SCOPE OF CABLE OUTSIDE DIAMETER		
SIZE	OUTSIDE DIAMETER	REMARK
0.5MM^2	1.4~1.9MM	SIGNAL CABLE
0.75 MM^2		
2.5 MM^2	2.7~3.7 MM	POWER CABLE
3 MM^2	2.7~3.7 MM	
4 MM^2	3.0~4.0 MM	

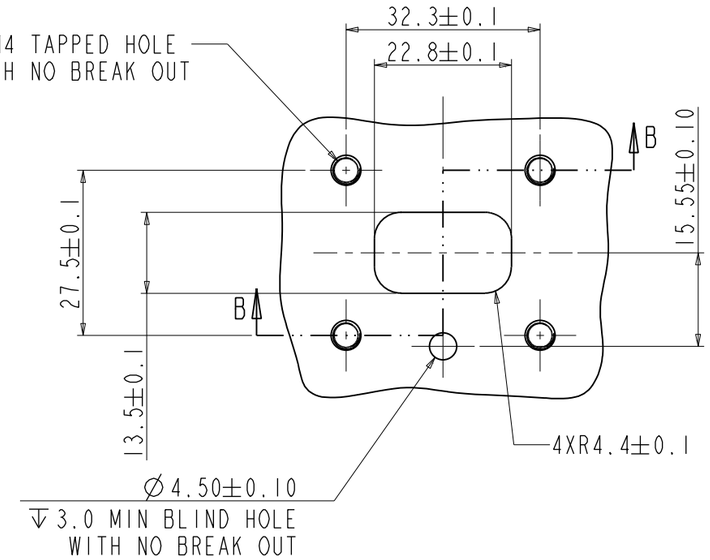

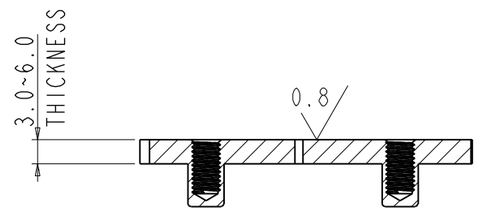

SECTION B-B
MOUNTING INTERFACE SPECIFICATION
(KEY A MOUNTING INTERFACE SHOWN)
REFER TO PAGE TWO FOR KEY B - F MOUNTING DIFFERENCES

C-HVSL282042XX

C-HVSL282042XX

DIMENSIONS	TOLERANCES	PROJECTION	Amphenol PCD Shenzhen	TITLE
ANSI Y14.5M UNITS: MM Pro/E FILE	.X ±0.5 .XX ±0.05 ANGLES ±2°		ENGR 2020.12.21	HVSL282 R/A RECEPTACLE
ORIGINAL	THIS DOCUMENT CONTAINS PROPRIETARY INFORMATION WHICH IS THE CONFIDENTIAL PROPERTY OF Amphenol PCD Shenzhen Co. Ltd Amphenol PCD Shenzhen Co. Ltd RESERVES THE RIGHT TO CLARIFY THIS DRAWING		CHKD APPD	SIZE A3 · DWG NO. C-HVSL282042XX · REV E
				CODE: 58982 · SCALE: 2:1 · SHEET 1 OF 2

安费诺精密连接器(深圳)有限公司
Amphenol PCD Shenzhen
受 控 文 件
2021年5月20日

C-HVSL282042XX

KEY A - F MOUNTING DIFFERENCES RECEPTACLE

042AX (KEY A)

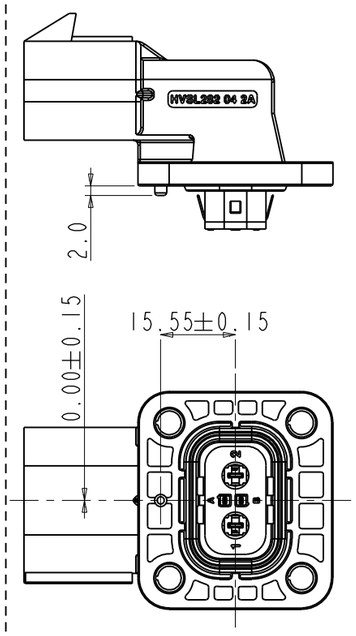

HVSL282042BX (KEY B)

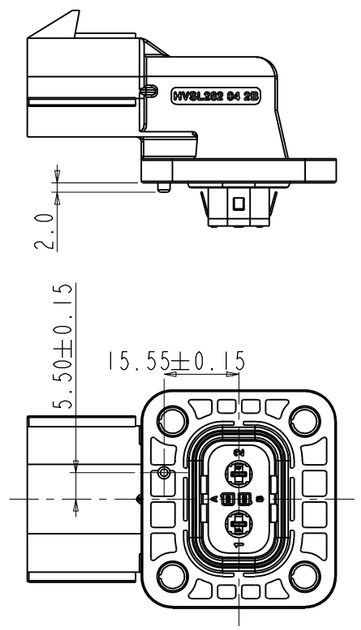

HVSL282042CX (KEY C)

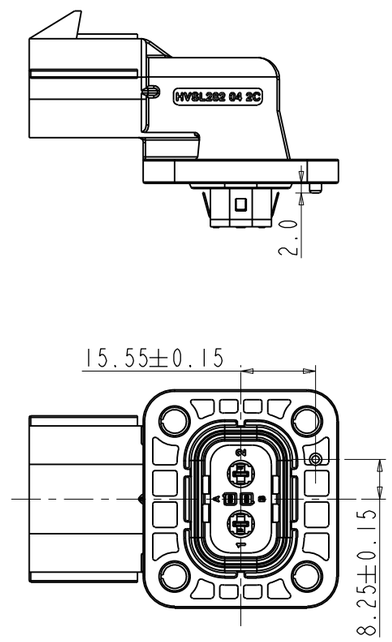

HVSL282042DX (KEY D)

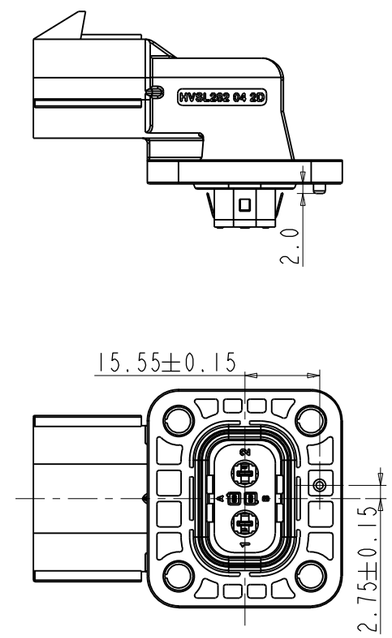

HVSL282042EX (KEY E)

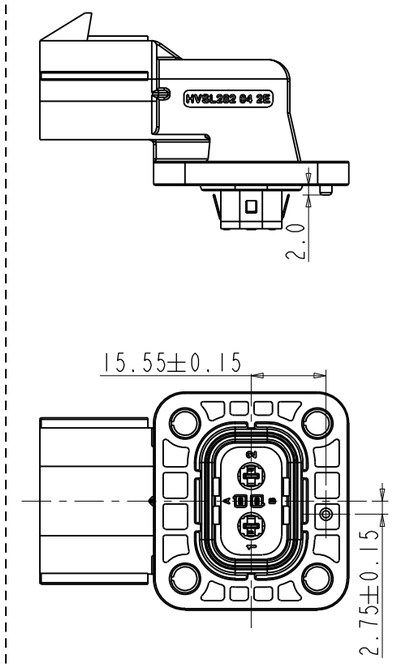

HVSL282042FX (KEY F)

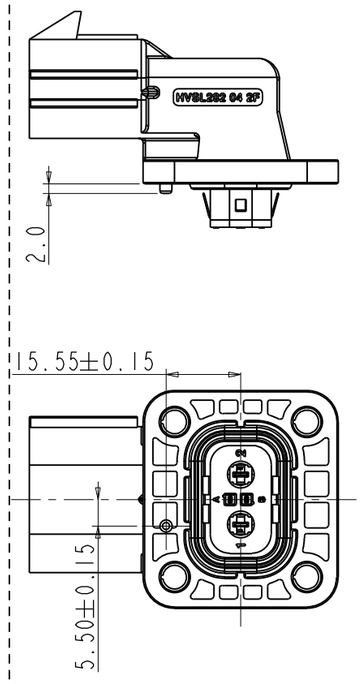

INTERFACE VIEW - MOUNTING SIDE

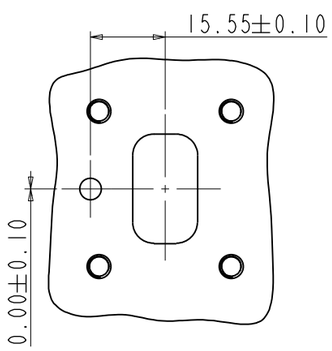

KEY A MOUNTING INTERFACE

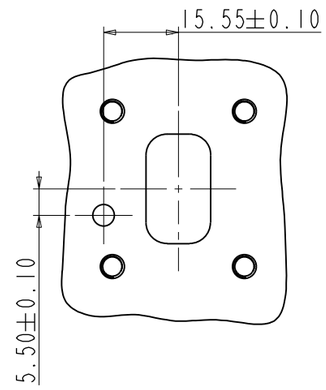

KEY B MOUNTING INTERFACE

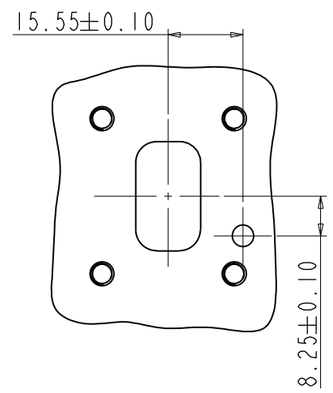

KEY C MOUNTING INTERFACE

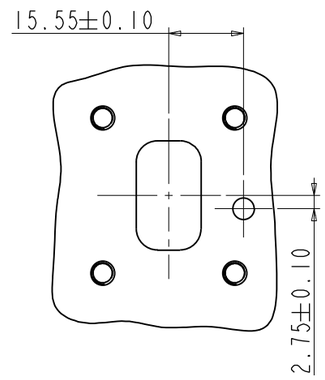

KEY D MOUNTING INTERFACE

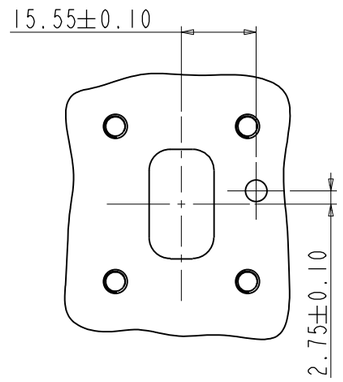

KEY E MOUNTING INTERFACE

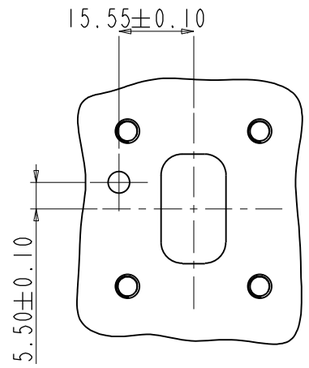

KEY F MOUNTING INTERFACE

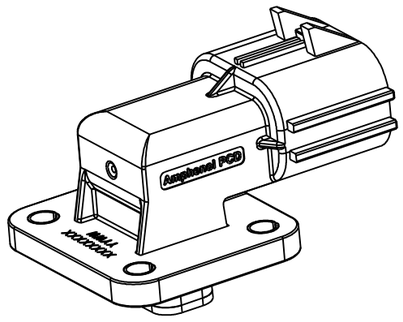

SIZE	DWG NO.	REV
A3	C-HVSL282042XX	E
CODE: 58982	SCALE: 2:1	SHEET 2 OF 2

C-HVSL282042XX
C-HVSL282042XX