C-HVEL12GS002S2

安费诺精密连接器(深圳)有限公司
Amphenol PCD Shenzhen
受 控 文 件
2023年3月3日

Amphenol PCD SZ
ORIGINAL
PDF Format

REV	ECN	DESCRIPTION	DATE	MODIFIED
1		PRE_RELEASE	2023.03.03	

Before installing the Elock into the inlet, check the waterproofring P03BR00179 whether to install the Elock lever

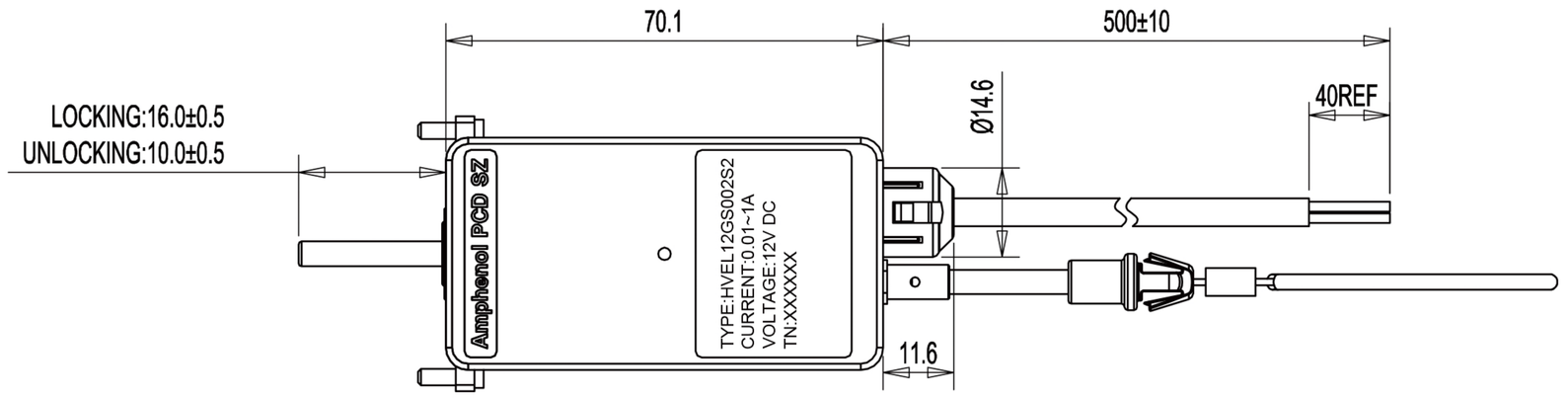

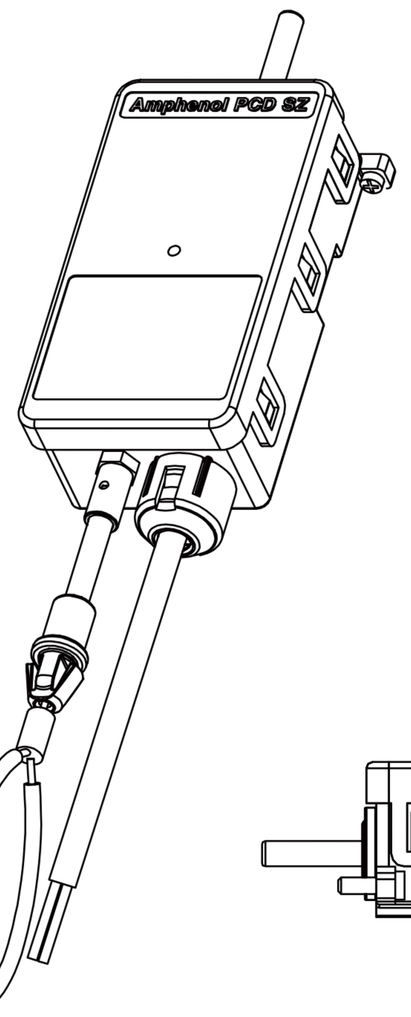

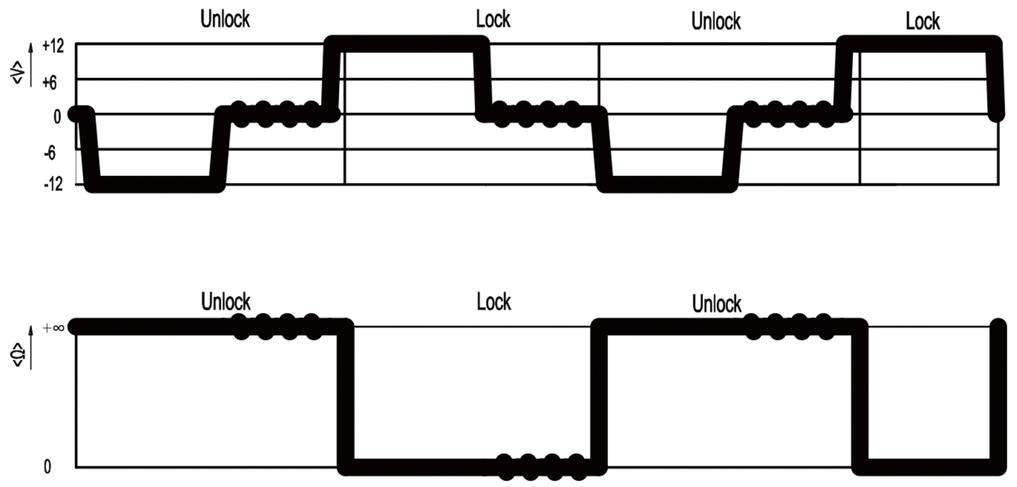

Suggested work time＞6000ms
Max time:N/A
Min time:3000ms

Suggested adjustment time:300ms
Max time:400ms
Min time:200ms

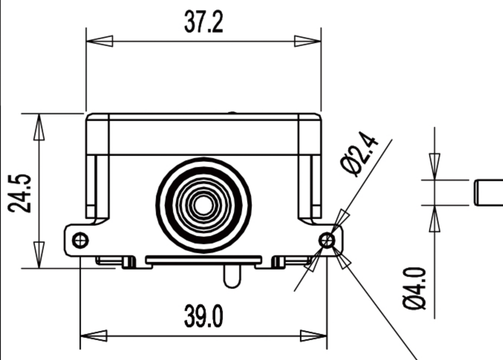

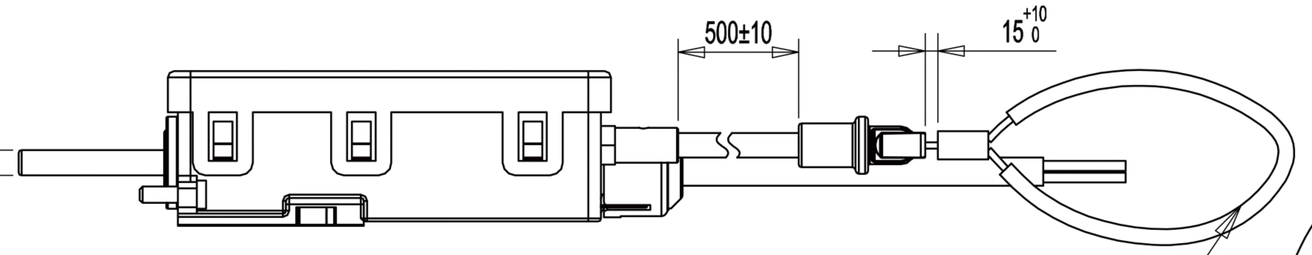

Recommended Mounting Torque:0.2-0.3N.m
2XST2.2X10

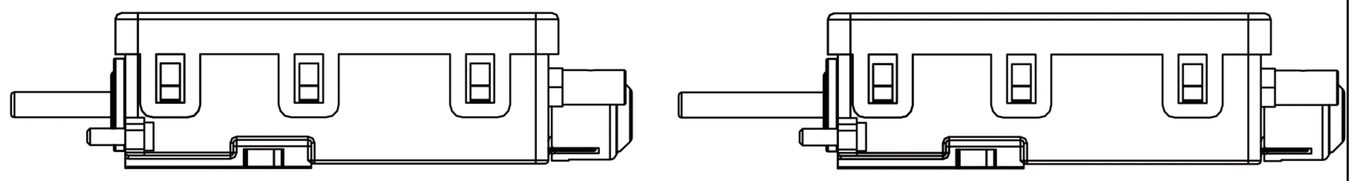

$R_U = +\infty\Omega$ $R_L = 0\Omega$

Schematic diagram of 12V electronic lock circuit principle

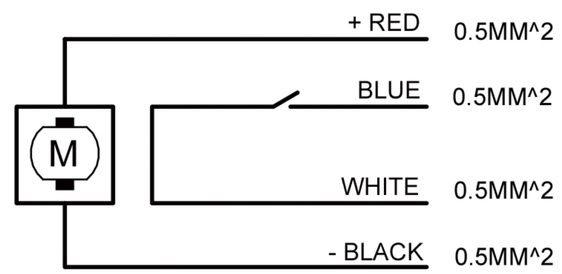

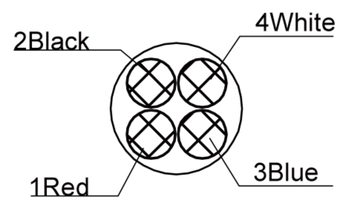

TYPE	RED	BLACK	RESISTANCE BETWEEN WHITE AND BLUE WIRE
UNLOCKING	−	+	($R_U = +\infty\Omega$)
LOCKING	+	−	($R_L = 0\Omega$)

NOTES:

1. Motor rated voltage: 12V
2. Motor allowable voltage: 9V~16V
3. Typical motor current used for locking: 50mA
4. The maximum current of the motor lock: 1000mA
5. Maximum voltage for lock detection: 12V (voltage between blue and white lines)
6. The maximum residence time of blocking current: 400MS
7. Suggested adjustment time: 300MS
8. Minimum adjustment time: 200MS
9. Durability (in the load cycle):> 40000
10. Ambient temperature (in operation):-30°C～+50°C
11. Ambient temperature (storage):-40°C～+85°C
12. Life of manual unlocking device: 3000
13. Minimum bending radius: 30mm
14. IP level: IP65 (after installing the waterproof ring and the charging base can reach IP65, the lock rod without waterproof ring is not waterproof)
15. The cable pulling force is not more than 30N
16. The tension of the emergency rope is not more than 40N
17. The contact switch is usually open

Unlock: +∞Ω
Lock: 0Ω

DIMENSIONS	TOLERANCES	PROJECTION	Amphenol PCD Shenzhen	TITLE
ANSI Y14.5M UNITS: MM CAD FILE	.X ±1.0 .XX ±0.5 ANGLES ±2°		ENGR 2023.03.03	DC_12V ELOCK
ORIGINAL	THIS DOCUMENT CONTAINS PROPRIETARY INFORMATION WHICH IS THE CONFIDENTIAL PROPERTY OF Amphenol PCD Shenzhen Co. Ltd Amphenol PCD Shenzhen Co. Ltd RESERVES THE RIGHT TO CLARIFY THIS DRAWING		CHKD APPD	SIZE A3 / DWG NO. C-HVEL12GS002S2 / REV 1
				SCALE 1:1 / SHEET 1 OF 1

C-HVEL12GS002S2

C-HVEL12GS002S2